Mithras Optics Technology

Specification

Product model：MCXPE-FH40-PH

Definition department：Engineering dept

Manufacture time：March 1 , 2010

Total page：3 page

The document revises the record

NO	Release date	Revision content	Revision	E.C.N	Edition
1	3.1 2010	Released			1.0
2					
3					
4					
5					
6					
7					
8					
9					
10					

Approbation	Verification	Formulation
Neo Yen	C.Y. Chu	Yao Tsai

Mithras Optics Technology

Product model	MCXPE-FH40-PH Spec.					Document code	
Definition department	Engineering dept	Edition	1.0	Page	2/3	Release date	2010/3/1

Product name: Optics LENS

Product model: MCXPE-FH40-PH

Material quality:

Housing: PC fireproof【Withstanding temperature 120℃(Max)】

Lens: PC【Withstanding temperature 120℃(Max)】

Color: Housing (White)

Lens (Transparent)

Measuring means: 2D CMM、Vernier Calipers。

Tolerance：±0.15

Exterior/Mechanism drawing:

Lens :

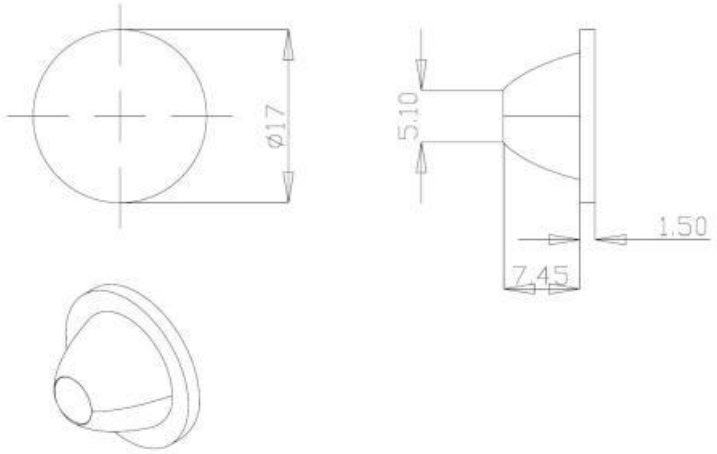

Lens + Housing :

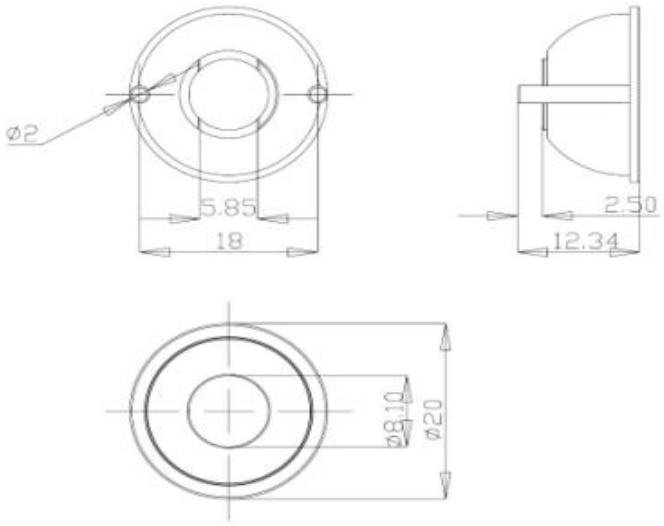

Unit：mm

Mithras Optics Technology

Product model	MCXPE-FH40-PH Spec.					Document code	
Definition department	Engineering dept	Edition	1.0	Page	3/3	Release date	2010/3/1

Test environment：Darkroom Test distance：1m	LED model	CREE XPE
	If (A)	0.35
	Vf (V)	3.2

MCXPE-FH40-PH	Beam Pattern
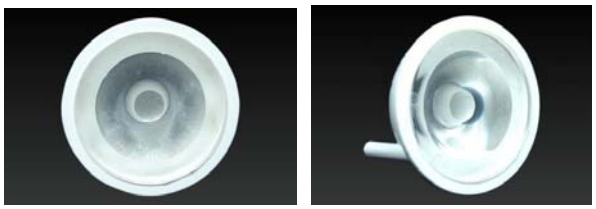	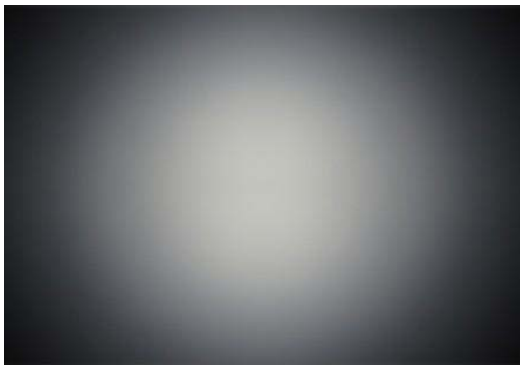
Angular Intensity Distribution	Shine on one degree diagram *X=Single LED Energy/1m

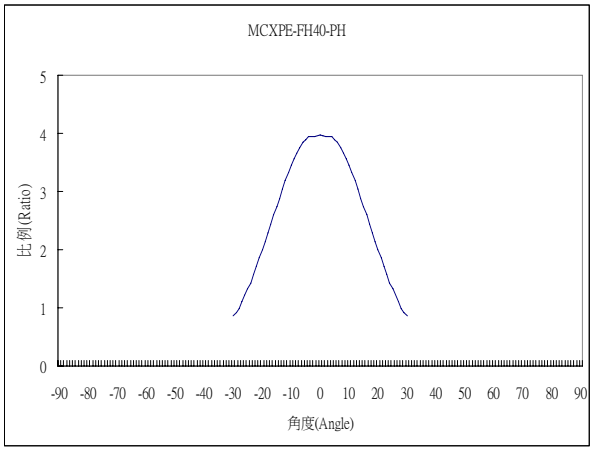

Angle (10%) :40°

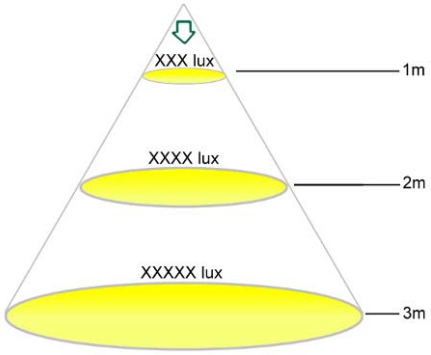

Test distance(m)	Ratio
1 米	4 X
2 米	1 X
3 米	0.45 X