# Mithras Optics Technology

## Specification

**Product model：MNS1W-FH35-PH**

**Definition department：Engineering dept**

**Manufacture time：December 1 , 2009**

**Total page：3 page**

**The document revises the record**

| NO | Release date | Revision content | Revision | E.C.N | Edition |
|---|---|---|---|---|---|
| 1 | | | | | 1.0 |
| 2 | | | | | |
| 3 | | | | | |
| 4 | | | | | |
| 5 | | | | | |
| 6 | | | | | |
| 7 | | | | | |
| 8 | | | | | |
| 9 | | | | | |
| 10 | | | | | |

| Approbation | Verification | Formulation |
|---|---|---|
| Neo Yen | C.Y. Chu | Yao Tsai |

# Mithras Optics Technology

| Product model | MNS1W-FH35-PH Spec. | | | | | Document code | |
|---|---|---|---|---|---|---|---|
| Definition department | Engineering dept | Edition | 1.0 | Page | 2/3 | Release date | 2009/12/1 |

Product name: Optics LENS

Product model: MNS1W-FH35-PH

Material quality:

Housing: PC fireproof【Withstanding temperature 120℃(Max)】

Lens: PC【Withstanding temperature 120℃(Max)】

Color: Housing (White)

Lens (Transparent)

Measuring means: 2D CMM、Vernier Calipers。

Tolerance：±0.15

Exterior/Mechanism drawing:

Lens :

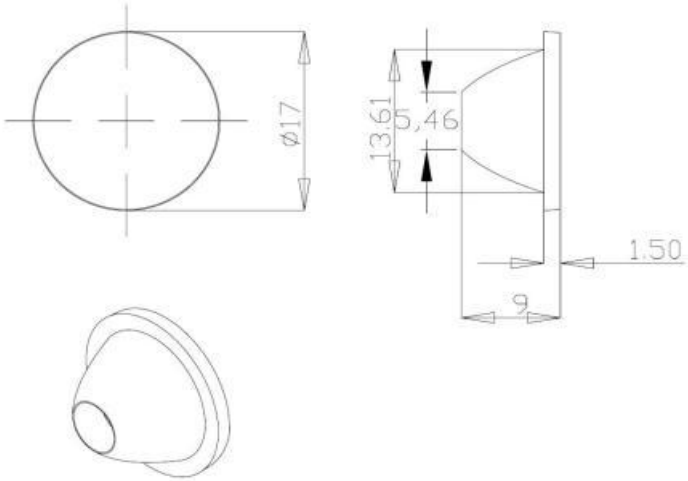


Lens + Housing :

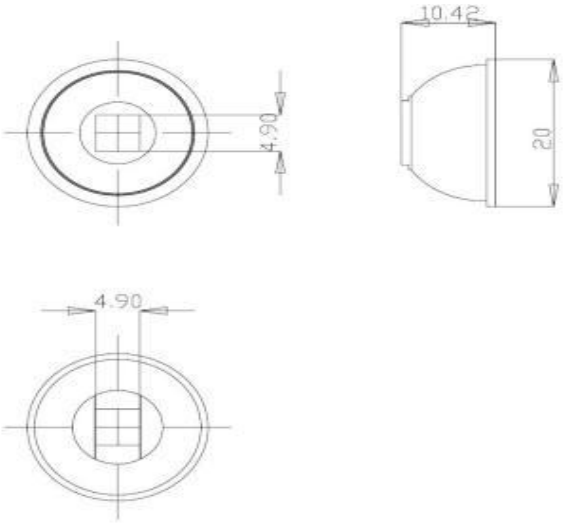


Unit：mm

# Mithras Optics Technology

| Product model | MNS1W-FH35-PH Spec. | | | | | Document code | |
|---|---|---|---|---|---|---|---|
| Definition department | Engineering dept | Edition | 1.0 | Page | 3/3 | Release date | 2009/12/1 |

| Test environment：Darkroom<br>Test distance：1m | LED model | NICHIA NS3W183T |
|---|---|---|
| | If (A) | 0.35 |
| | Vf (V) | 3.2 |

| MNS1W-FH35-PH | Beam Pattern |
|---|---|
| | 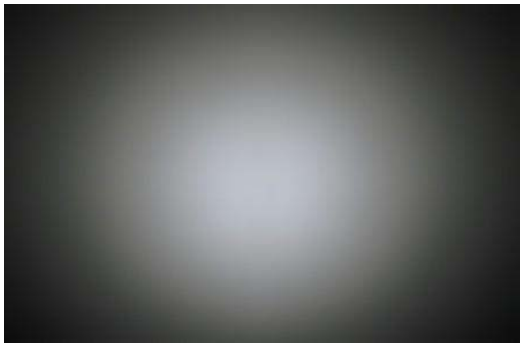 |
| Angular Intensity Distribution | Shine on one degree diagram<br>*X=Single LED Energy/1m |
| 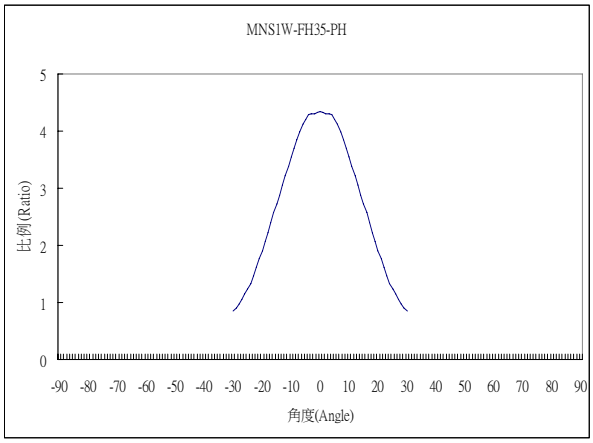 | 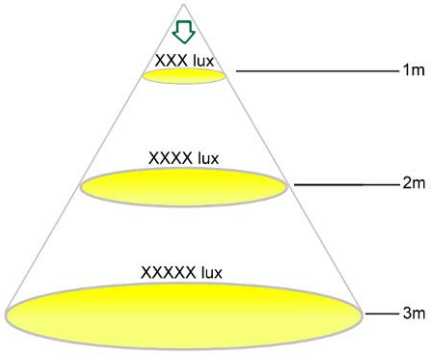 |





Angle (10%) :35°

| Test distance(m) | Ratio |
|---|---|
| 1m | 4.35 X |
| 2m | 1.1 X |
| 3m | 0.48 X |